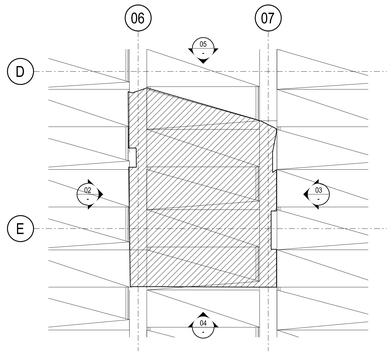

01 PARTIAL REFLECTED PLAN - ATRIUM CEILING
SCALE 1:100

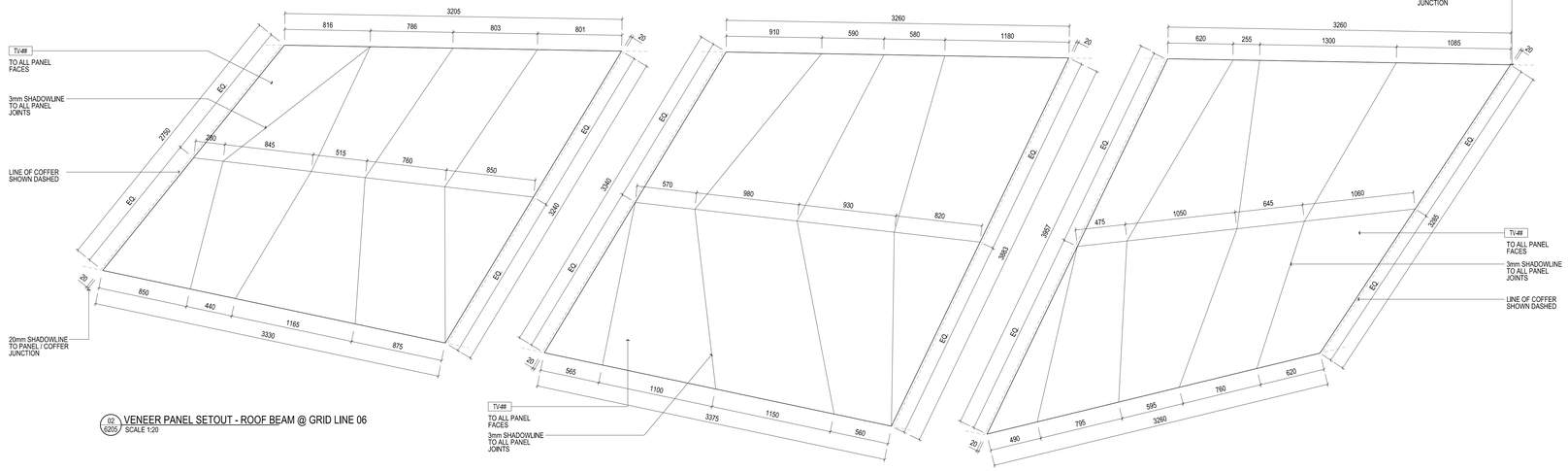

02 VENEER PANEL SETOUT - ROOF BEAM @ GRID LINE 06
6205 SCALE 1:20

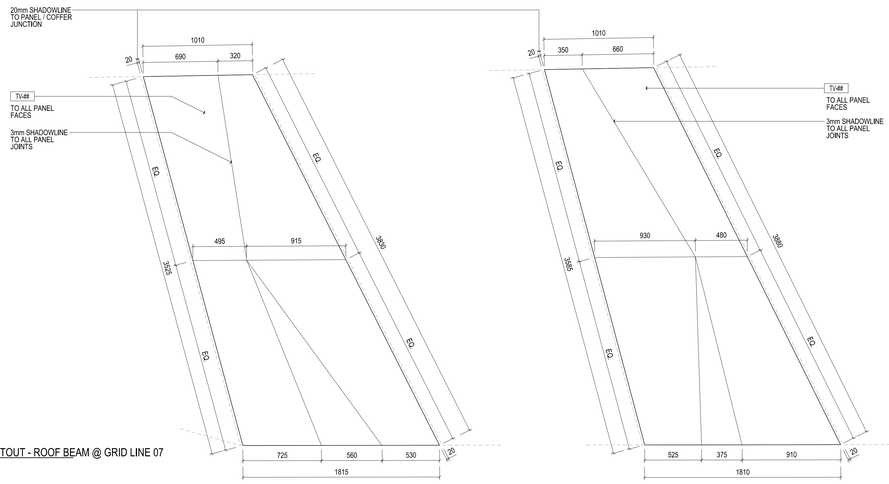

03 VENEER PANEL SETOUT - ROOF BEAM @ GRID LINE 07
6205 SCALE 1:20

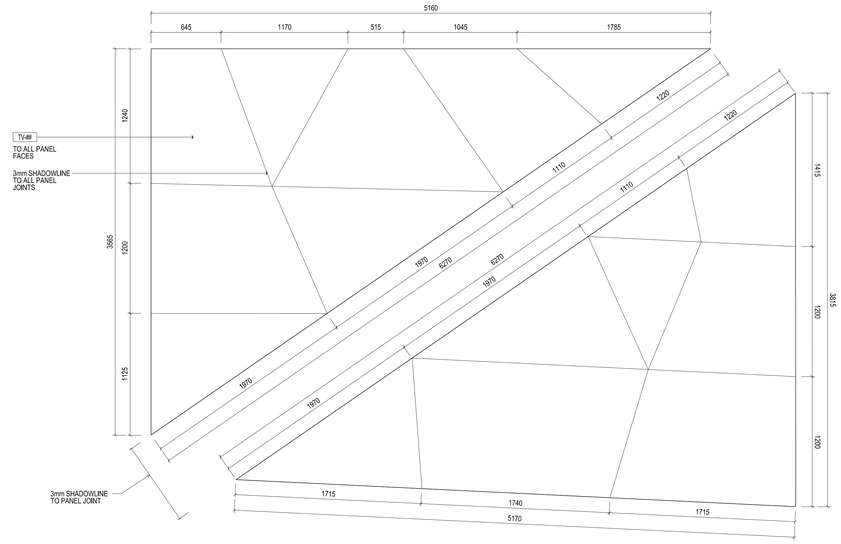

04 VENEER PANEL SETOUT - COFFER 03-B
SCALE 1:20

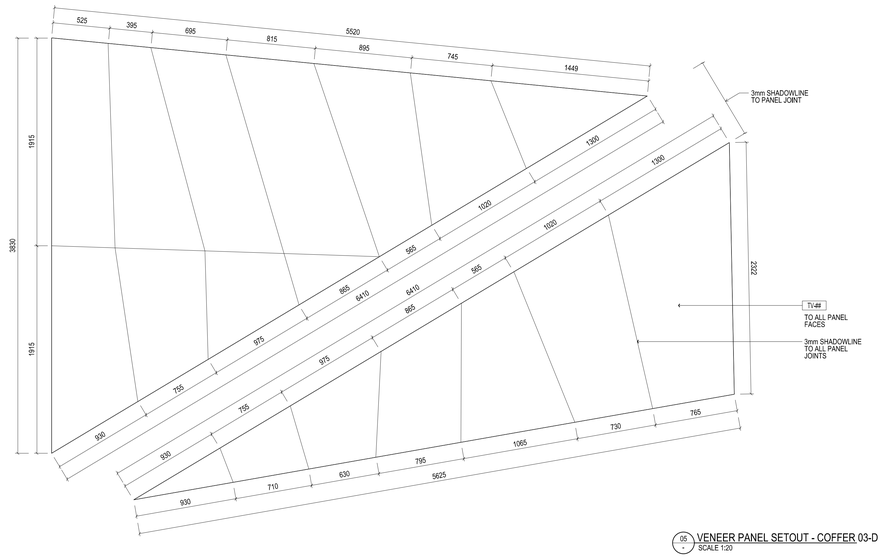

05 VENEER PANEL SETOUT - COFFER 03-D
SCALE 1:20

THIS DRAWING IS AN UNCONTROLLED COPY UNLESS STAMPED OTHERWISE

CONTRACTORS SHALL VERIFY JOB DIMENSIONS BEFORE ANY JOB COMMENCES.
ALL SHOP DRAWINGS SHALL BE SUBMITTED TO THE SUPERINTENDENT AND MANUFACTURE SHALL NOT COMMENCE PRIOR TO THE RETURN OF UNAMENDED SHOP DRAWINGS SIGNED BY THE CONSULTANT. FIGURED DIMENSIONS SHALL TAKE PRECEDENCE OVER SCALED. THIS DRAWING SHOULD BE READ IN CONJUNCTION WITH ALL RELEVANT CONTRACT, SPECIFICATIONS AND DRAWINGS COPYRIGHT OF THIS DRAWING IS VESTED IN WARDLE

General Notes

1. 3mm SHADOWLINE TO ALL PANEL JOINTS UNLESS NOTED OTHERWISE
2. ALL SETOUT DIMENSIONS TAKEN FROM CENTRELINE OF PANEL JUNCTION SHADOWLINE
3. ALL DIMENSIONS ARE NOMINAL; PANEL SETOUT TO ALIGN WITH SETOUT OF CEILING COFFER SOFFIT PANELS AND CLADDING TO HANGING STUDIO.

Rev	Issue	Revision Description	Amd	Date
A	SG	ISSUED FOR CONSTRUCTION	-	10.01.14
03	SG	100% CD - TENDER ISSUE	-	07.09.12
02	SG	90% CD ISSUE	-	10.08.12
01	SG	75% CD ISSUE	-	13.07.12

Brookfield MULTIPLEX

NADAAA

NADAAA
1920 Washington Street No.2
Boston
Massachusetts
02118 USA

Telephone
+1 617 442 6232
Facsimile
+1 888 442 1417
Email
nada@nadaaa.com

John Wardle Architects

25 Rokeby Street, Collingwood, Victoria 3066 Australia
Tel : +61 3 8662 0400 www.johnwardlearchitects.com
© 2012 John Wardle Architects ABN 83 006 814 268

Client
University of Melbourne
Parkville Campus

Project
Faculty of Architecture
Building and Planning

Title
ROOF DETAILS
TIMBER VENEER PANEL SETOUT

Project No. 0913			Scale 1:20 @ A0
Drawing No. AR6212			Revision A
Date July 2012	Drwn -	Co-Ord -	Chck -

FILENAME - $FILE$

FOR CONSTRUCTION